DELTA DESIGN
INC.

5900

INSTRUCTION MANUAL

DELTA DESIGN, INC.
5775 Kearny Villa Rd.
San Diego, California 92123
(619) 292-5000
TWX: (910) 335-1215

INSTRUCTION MANUAL
Model 5900

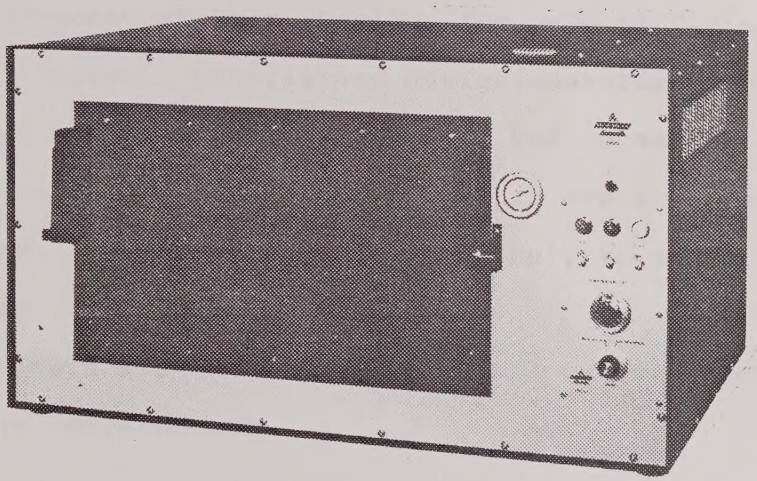

DELTA DESIGN INC

ENVIRONMENTAL TEST CHAMBER

ENVIRONMENTAL CONTROL EQUIPMENT FOR RESEARCH AND INDUSTRY
5775 KEARNY VILLA ROAD • SAN DIEGO, CALIFORNIA 92123

5900-1080

Printed in U.S.A.

PROPRIETARY NOTICE

The information and design disclosed herein were originated by and are the property of Delta Design, Inc.—Delta Design, Inc. reserves all patent, proprietary design, manufacturing, reproduction use, and sales rights thereto, and to any article disclosed therein, except to the extent rights are expressly granted to others. The foregoing does not apply to vendor proprietary parts.

Specifications remain subject to change to allow the introduction of design improvements.

Copyright 1980©
Delta Design, Inc.
5775 Kearny Villa Rd.
San Diego, CA 92123

Printed in U.S.A.

SPECIFICATIONS

TEST VOLUME (H x W x D)	11 x 19-1/2" x 15" (27.94 x 49.53 x 38.10 Cm)
AIR CIRCULATION	Two 140 CFM centrifugal blowers with baffling to provide equal distribution throughout the chamber in a horizontal air flow pattern.
OUTSIDE CASE DIMENSIONS (H x W x D)	17-1/4" x 32" x 25" (43.82 x 81.28 x 63.50 Cm)
INNER LINER	Type 302-304 Stainless Steel
OUTER CASE	Aluminum
INSULATION	Fiberglas
WEIGHT	90 Lbs. (40.82 Kg)
POWER REQUIREMENTS	120 VAC, 50/60 Hz Single Phase, 20 Amps or 240 VAC, 50/60 Hz, Single Phase, 15 Amps.
CONTROLS	POWER On-Off Switch and Light COOL On-Off Switch and Light HEAT On-Off Switch and Light TEMPERATURE SET Control MANUAL/PROGRAM Control Switch (MODE)
HEATING ELEMENTS	Four 8.75 Ohm Elements, Total of 1775 Watts, Nichrome Wire
COOLING	Liquid Carbon Dioxide (LCO_2) or Liquid Nitrogen (LN_2)
PROGRAMMING	Programmable
COOL DOWN TIME	Ambient to $-54^{\circ}C$ in 7 minutes
HEAT UP TIME	Ambient to $+217^{\circ}C$ in 20 minutes
TEMPERATURE RANGE	$-73^{\circ}C$ to $+315^{\circ}C$
RESETTABILITY	$\pm 0.25^{\circ}C$

TEMPERATURE DEVIATION	$\pm 0.1^{\circ}C$
LINE VOLTAGE STABILIZATION	$\pm 0.25^{\circ}C$ for 105 to 125 VAC Line Voltage Change $\pm 0.25^{\circ}C$ for 220 to 240 VAC Line Voltage Change
AMBIENT TEMPERATURE COMPENSATION	$\pm 0.02^{\circ}C/C^{\circ}$
GRADIENTS IN TEST AREA	(2" from walls in corners and in the center of the test area): $\pm 0.75/100^{\circ}C$ difference measured from ambient.

NOTE: IT IS RECOMMENDED THAT THIS MANUAL BE READ THOROUGHLY BEFORE CONNECTING EQUIPMENT TO ELECTRICAL POWER SOURCE.

INTRODUCTION

This Delta Design, Inc. Chamber is a precision environmental test chamber capable of attaining temperatures from -73°C to +288°C with a minimal temperatures deviation of ±0.1°C.

Temperature control in this chamber is by means of Delta's Solid State Controller, which can be operated manually or thru an external programmer.

CONTENTS

	Page
SPECIFICATIONS	i
INTRODUCTION	iii
ILLUSTRATIONS	v
1 PRECAUTIONS	1
2 OPERATING INSTRUCTIONS	4
2.1 Installation	4
2.2 Power Connection	4
2.3 Liquid Coolant	4
2.4 Liquid Nitrogen	5
2.5 Setting the Dial Temperature Indicator	6
2.6 Adjusting the Failsafe	7
2.7 Programming	7
3 CHAMBER & CONTROLLER DESCRIPTION	8
3.1 Chamber	8
3.2 Solid State Controller	8
3.3 Null Detector Circuit	8
4 WARRANTY	10

ILLUSTRATIONS

Figure		Page
1	Operating Instructions	3
2	Temperature Set Dial	6
3	Chamber Air Flow Pattern	11
4	Temperature Control System	12

1 PRECAUTIONS

1.1 Connect SAFETY PLUG (rear of chamber) when external programmer is not being used. This will preclude any accidental high temperature being obtained if the MODE switch is placed in the PROGRAM position with no programmer connected.

1.2 Ground the case of the chamber to earth ground. When a grounded outlet is not available, use the three-to-two adaptor and connect the green colored "pigtail" to earth ground. The chamber must not be operated without the case grounded.

1.3 Unplug the chamber from all sources of power before attempting any type of servicing or removal of the controller chassis. The case of the SCR Switch assembly, located on the controller sub-assembly, is at power line potential and extreme care in servicing or calibration must be exercised.

1.4 Do not block the right side of chamber or outlet of controller area on bottom of the chamber (right side) for controller cooling purposes.

1.5 Ensure that the correct type of LCO_2 (liquid carbon dioxide) source is connected to the chamber before operating at low temperature. Recommend standard 50 pound capacity high dry siphon LCO_2 supply. Test the LCO_2 for cleanliness by discharging a quantity of it through a clean white handkerchief. Bits of rust and traces of oil, ice or water indicate contaminated LCO_2 which should not be used.

1.6 Operate the chamber at a temperature of 200°C for an hour after prolonged operation at low temperatures. This restores the efficiency of the insulating material by driving out the moisture which has been condensed out of the air.

CAUTION

Liquid oxygen may be formed in the insulation when the chamber is operated at low temperatures. Any mixture of oil and liquid oxygen can be explosive. If oil contamination is suspected, bake the chamber out by operating it at a temperature of 200°C for a period of three hours before taking it to extremely low temperatures.

FAILSAFE ADJUST- LOCATED ON TOP OF CHAMBER. TURN TO CHANGE TEMPERATURE AT WHICH FAILSAFE WILL TRIP CAUTION: DO NOT LOWER FAILSAFE TEMP. SETTING UNLESS HEAT SW. IS ON & FAILSAFE IS OFF.

FAILSAFE LAMP- GLOWS RED WHEN FAILSAFE IS TRIPPED

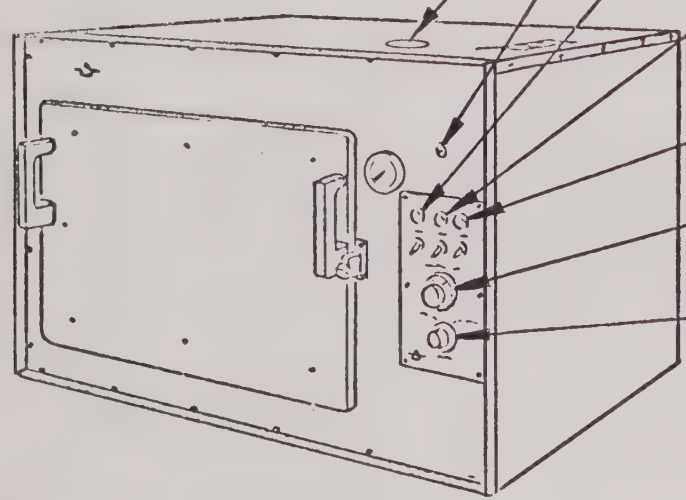

(5) HEAT SWITCH & LIGHT-- SWITCH ON-- ON POSITION ALLOWS CONTROLLER TO APPLY HEAT AUTOMATICALLY TO MAINTAIN SELECTED TEMPERATURE IN CHAMBER RED LIGHT IS ON STEADY WHEN CHAMBER IS HEATING, BLINKS WHEN CHAMBER REACHES SELECTED TEMPERATURE ABOVE AMBIENT

(4) COOL SWITCH & LIGHT-- SWITCH ON-- ON POSITION ALLOWS CONTROLLER TO APPLY COOLANT AUTOMATICALLY TO MAINTAIN SELECTED TEMPERATURE IN CHAMBER GREEN LIGHT IS ON STEADY WHEN CHAMBER IS COOLING.

(3) POWER SWITCH & LIGHT-- SWITCH ON MAIN POWER ON. WHITE LIGHT GLOWS WHEN POWER IS ON.

(2) TEMPERATURE SET DIAL-- SET TO DESIRED TEMPERATURE. SELECTS CHAMBER TEMPERATURE IF MODE SWITCH IS IN MANUAL POSITION.

(1) MODE SWITCH-- SET TO MANUAL POSITION. ASSIGNS THE SELECTION OF CHAMBER TEMPERATURE TO TEMPERATURE SET DIAL OR EXTERNAL PROGRAMMER.

MANUAL POSITION: TEMPERATURE SET DIAL DETERMINES CHAMBER TEMPERATURE.

PROGRAM POSITION: PROGRAMMING RESISTANCE CONNECTED TO PROGRAM JACK AT REAR OF UNIT SELECTS CHAMBER TEMPERATURE.

CAUTION: ALWAYS CONNECT SAFETY PLUG (AT REAR OF CHAMBER) WHEN AN EXTERNAL PROGRAMMER IS NOT BEING USED

THERMOMETER- INDICATES CHAMBER TEMP. IN TEST VOLUME.

OPERATING INSTRUCTIONS:

A. INSTALL THE CHAMBER, CONNECT POWER CORD TO SUITABLE OUTLET & COOLANT SUPPLY TO VALVE INLET.

B. FOLLOW STEPS 1 THRU 5.

OPERATING INSTRUCTIONS
FIGURE 1

2 MODEL 5900 OPERATING INSTRUCTIONS

2.1 Installation - Top of unit must be clear for Failsafe adjustment.

2.2 Power Connection

2.2.1 Power connection should be an AC power source rated at 120 V-20 amps - 50/60 Hz, or 240V - 15 amps - 50/60 Hz (240V option). The chamber must be connected to earth ground (green wire).

2.3 Liquid Coolant

2.3.1 Liquid Carbon Dioxide - 1050 psi system. A siphon type liquid CO_2 bottle is recommended.
2.3.1.1 Test the bottle by releasing a small amount of LCO_2 into a white handkerchief. Any brown stain indicates rust which would clog the filter and either freeze in the valve or clog the injector nozzle. Crack the LCO_2 valve open on the cylinder and notice the spray. It should be a dense, white cloud. It looks thin and gray when the tank is almost empty. An amost empty tank will not give proper cooling and should not be used. Connect the tank of LCO_2 to the rear of the chamber with the supplied high-pressure hose and fittings. Place a small amount of sealing compound on the threads of the male fitting to prevent leakage. DO NOT LET ANY SEALING COMPOUND GET INTO THE VALVE INLET ON THE REAR OF THE CHAMBER. Open the bottle and check for leaks which show as frosty spots on the hose or fittings.

2.3.2 Liquid Carbon Dioxide - 300 psi Low Pressure system.

2.3.2.1 When the in-plant use of liquid CO_2 exceeds approximately 1000 to 2000 pounds per month, a bulk liquid storage system can be installed to reduce the cost of coolant. Chambers being operated with this type of system have to be fitted with a different CO_2 valve and injector than used on a 1050 psi system. Contact Delta for information concerning valve replacement. If new chambers are ordered for use with a bulk storage 300 psi system, the fact should be stated on the order.

NOTE: The bulk storage system should be of the recirculating type if possible. If not, the supply should be located as close as possible

to the chamber to minimize gas formation in the supply line. This is particularly important in low volume usage systems as the insulation and fluid flow are the factors that prevent boiling of CO_2 in the supply line. Gaseous CO_2 is not an effective coolant.

2.3.2.2 All lines, valves and connecting hoses should be blown out before the chamber is connected. Water is very troublesome and is apparently inherent in some low-pressure refrigerated supplies. If lines are opened to bleed off excessive pressure at shutdown, close them to prevent contamination by condensed moisture. This will help to keep ice from forming in the control valve.

2.4 Liquid Nitrogen

CAUTION

Oxygen in the air surrounding the chamber inner liner and in the insulation can be liquified at low temperatures. This creates an oxygen rich atmosphere surrounding the heater area. The chamber tends to be self purging as the nitrogen replaces the usual atmosphere near the heaters. Any mixture of oil and liquid oxygen can be explosive so that extreme care must be used during operation at very low temperatures.

2.4.1 A 300 psi valve and stainless steel, polyurethane foam insulated, injector assembly is used for the liquid nitrogen applications. LCO_2 from a tank will not operate properly in a chamber equipped for LN_2.

2.4.2 Connect a liquid nitrogen liquid withdrawal container to the LN_2 input of the chamber with an insulated transfer line. A relief valve should be installed in the line with a relief pressure between 60 and 100 psi for a 2700 cubic foot 50 psi liquid withdrawal container.

2.5 SETTING THE DIAL TEMPERATURE INDICATOR

2.5.1 Description

2.5.1.1 Refer to example A - Set both dials at zero.

2.5.1.2 One complete rotation of the knob equals 100°. Clockwise is plus (+) degrees (F. or C) and counter-clockwise is minus (-) degrees. Each rotation of the knob is indicated by the small dial nearest the knob.

2.5.1.3 The large dial indicates each degree, every tenth numbered. Thus, as in example B, the large dial is set at 15, and the small dial is beyond 3, therefore the setting is +315°.

2.5.1 When setting to a minus (-) temperature it is necessary to subtract the degrees from 100, i.e., 20 from 100 equals "80" reading on the large dial to have a setting of -20°. This is shown in example C. It will be noted that the zero on the small dial is just to the left of the marker. Also, on the models having a range greater than -100°, it is necessary to keep track of the counter-clockwise rotation of the knob.

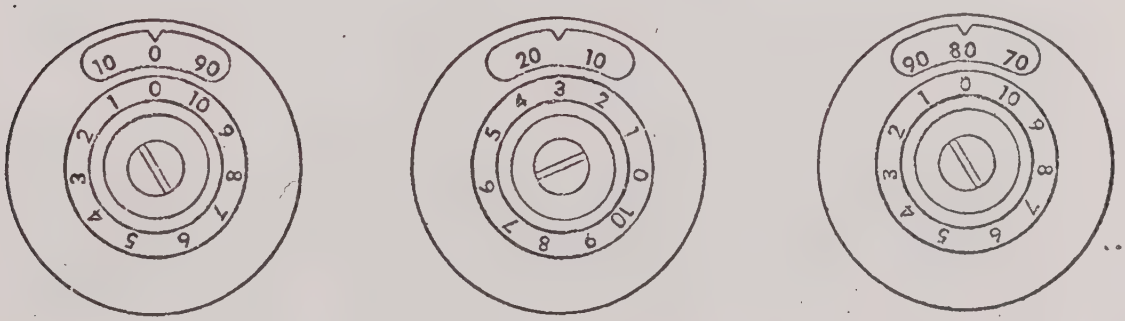

A (0°) B (+315°) C (-20°)

FIGURE 2 - TEMPERATURE SET DIAL

2.6 Adjusting the Failsafe - (Failsafe is located in chamber top)

2.6.1 To adjust the FAILSAFE high temperature protection unit, it is first necessary to remove the cover plate. Adjustment is made by rotating the slotted FAILSAFE control. The trip temperature is increased by rotating the control counterclockwise and is lowered by turning the control clockwise. The FAILSAFE setting is preset at the factory at +315°C (maximum rating of standard chamber). If it is desirable to change the setting to a lower temperature setting, operate the chamber at the maximum temperature desired. Adjust the FAILSAFE until it is on the verge of tripping.

CAUTION

Do not rotate the FAILSAFE setting more than one full turn lower than the trip point, as this can damage the unit.

2.7 Programming

2.7.1 Connect the correct resistances between pins 1 and 3 of the PROGRAM Jack. Set the MODE Switch to PROGRAM and the HEAT and COOL switches to their ON positions. The controller will apply heat or coolant as needed to obtain the programmed temperature.

2.7.2 A Safety plug is provided with the chamber and should be kept connected to the PROGRAM input whenever an actual programmer or actual resistance is not connected. The safety plug will prevent the chamber from accidently being programmed to a very high temperature if the MODE Switch is placed in the PROGRAM position with an open PROGRAM input.

2.7.3 The safety plug disables the heat and cool circuits of the controller when the MODE Switch is placed in the PROGRAM position.

3 CHAMBER & CONTROLLER DESCRIPTION

3.1 Chamber

3.1.1 The chamber is a precision environmental test unit having a stainless steel interior, aluminum outer case and fiberglas insulation. The air circulation is closed and provided by 140 CFM blowers (see Figure 3).

3.1.2 The chamber is heated by applying full wave power to bobbin wound nichrome heating elements via the heat switch.

3.1.3 The chamber is cooled by injecting liquid CO_2 (liquid nitorgen in the LN_2 models) into the air stream through an expansion nozzle. The coolant flow is metered by a solenoid valve, controlled by the COOL solid state switch.

3.1.4 The temperature control system is shown in block diagram form as Figure 4.

3.2 Solid State Controller

3.2.1 The controller compares the resistance of the temperature probe to the resistance of the indicated set point on the TEMPERATURE SET dial potentiometer or the digital resistance selection of the optional Digitemp controller. The resistance of a remote programming resistor is compared to the probe resistance of the MODE switch in the PROGRAM position.

3.2.2 The resistance of the probe will be either less than, equal to, or greater than the resistance of the TEMPERATURE SET potentiometer (or the DIGITEMP), i.e., program resistance. These three situations directly correspond to the chamber temperature being lower than, equal to, or higher than desired. The controller applies heat, coolant, or withholds both to obtain and maintain the selected temperature in the chamber.

3.2.3 Mode - The controller is a three mode unit, i.e.:

(a) Heat only
(b) No heat or coolant
(c) Coolant only

This mode of control ensures that LCO_2 or LN_2 is not wasted in a continuous cycling of the heaters and coolant valve such as would be the case for a simple two mode output controller.

3.2.4 Further information on the controller may be found in the complete Type III Controller Manual included as part of this information package.

3.3 Null Detector Circuit

3.3.1 A contact closure is provided at the rear which functions when the chamber reaches the indicated set point of the controller. This contact closure may be used to signal external equipment that the chamber has reached selected temperature.

3.3.2 The Delta Design Model 9308 HI-LO Step Programmer, Model 9311 TEN STEP Programmer, and the Model 9313 HI-LO AMBIENT Programmer utilize the null contacts to start their timers when they are used with the chamber. This contact closure feature is most useful in automatic test programming applications.

4 WARRANTY

Delta Design, Inc. guarantees all products manufactured and sold by it to conform to published specifications and against defective material and workmanship for a period of 90 days from the date of our shipment. Temperature chambers and electronics are warranted for one year from date of shipment. All contactor assemblies are warranted for a period of 90 days or 1/2 million cycles. Obligation under these warranties is limited to repair or replacement by Delta at its plant or one of its authorized service stations, on any of our products which Delta determines to be defective or not in accord with stated specifications. Delta will not accept responsibility for any defect caused by improper use, nor will Delta assume liability for any unauthorized repairs or modifications to its products or materials, even though defective or not in accord with the specifications. In no case will responsibility extend to products, materials, or equipment not manufactured by Delta. All products to be returned to Delta's plant for warranty repair must have prior written approval from Delta Design, Inc., and all return transportation charges will be at the buyer's expense. Delta will not accept liability for any unauthorized returns. No liability will be accepted for any damages to customer's materials, and equipment due to the use or misuse of Delta's products, nor for any loss of profits or other special damages. Delta Design, Inc., reserves the right to change price, design features and/or specifications without notice.

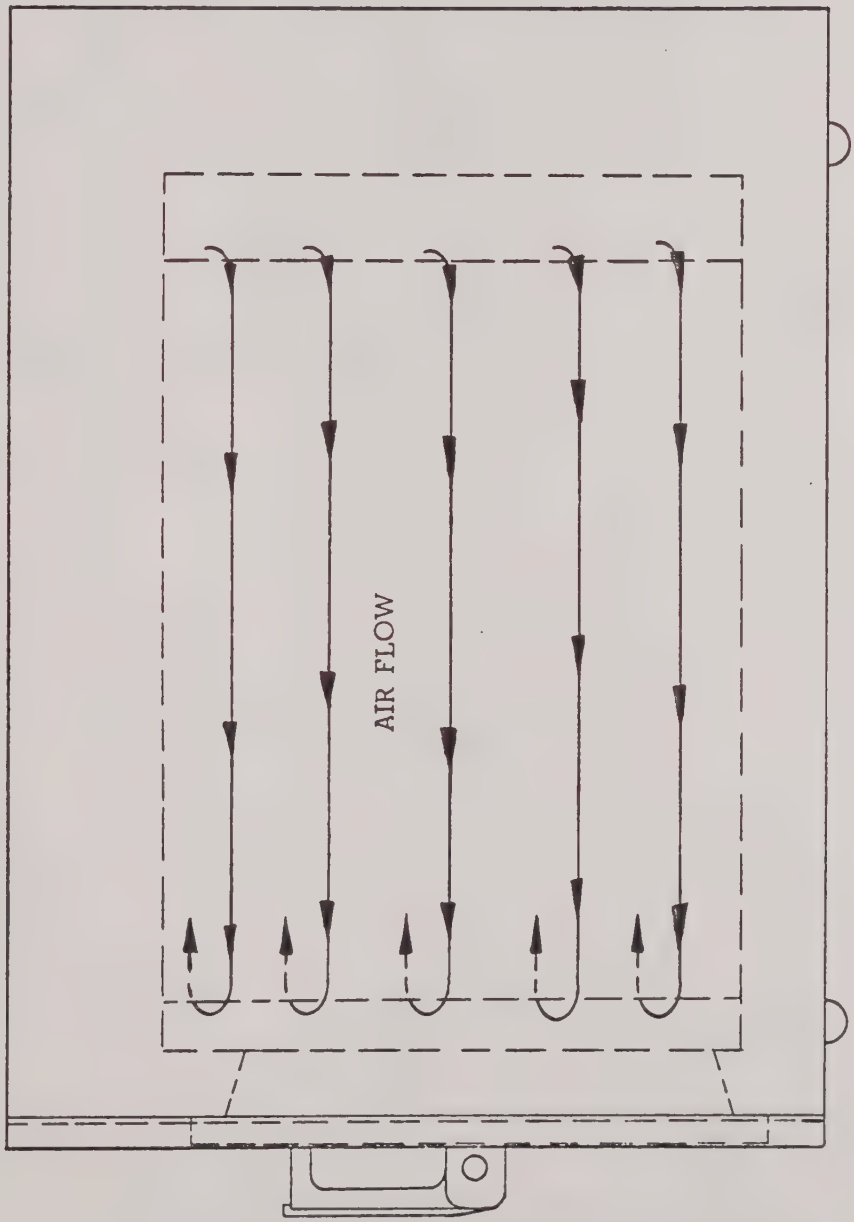

SIDE VIEW

FIGURE 3

CHAMBER AIR FLOW PATTERN

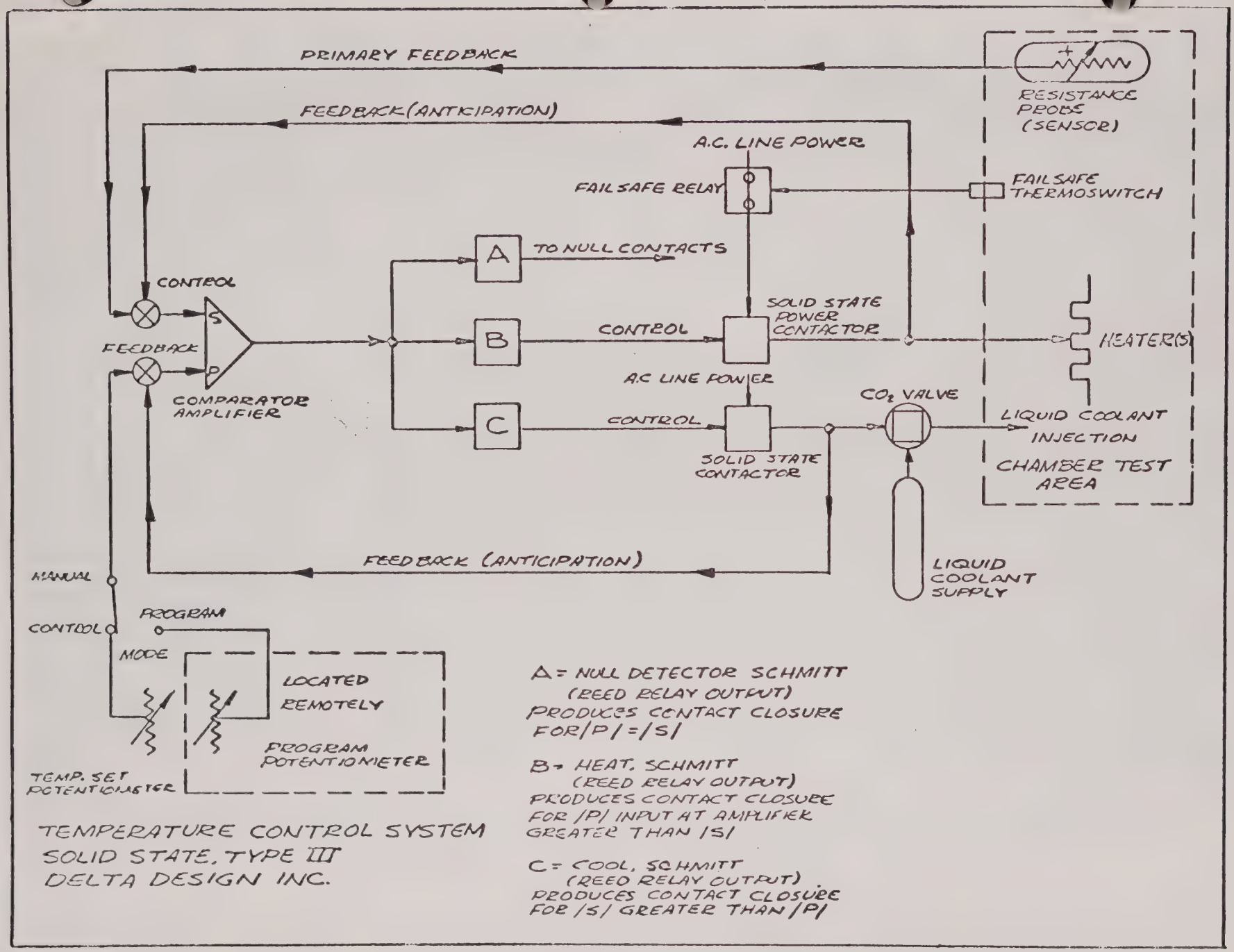
PRIMARY FEEDBACK
FEEDBACK (ANTICIPATION)
RESISTANCE PROBE (SENSOR)
A.C. LINE POWER
FAIL SAFE RELAY
FAIL SAFE THERMOSWITCH
A
TO NULL CONTACTS
CONTROL
S
FEEDBACK
P
COMPARATOR AMPLIFIER
B
CONTROL
SOLID STATE POWER CONTACTOR
HEATER(S)
A.C LINE POWER
C
CONTROL
SOLID STATE CONTACTOR
CO_2 VALVE
LIQUID COOLANT INJECTION
CHAMBER TEST AREA
FEEDBACK (ANTICIPATION)
LIQUID COOLANT SUPPLY
MANUAL
CONTROL
PROGRAM
MODE
LOCATED REMOTELY
PROGRAM POTENTIOMETER
TEMP. SET POTENTIOMETER
TEMPERATURE CONTROL SYSTEM
SOLID STATE, TYPE III
DELTA DESIGN INC.
A = NULL DETECTOR SCHMITT
(REED RELAY OUTPUT)
PRODUCES CONTACT CLOSURE
FOR /P/ = /S/
B = HEAT. SCHMITT
(REED RELAY OUTPUT)
PRODUCES CONTACT CLOSURE
FOR /P/ INPUT AT AMPLIFIER
GREATER THAN /S/
C = COOL. SCHMITT
(REED RELAY OUTPUT)
PRODUCES CONTACT CLOSURE
FOR /S/ GREATER THAN /P/

FIGURE 4

P.L. 1654248 REV N/C SHT 1 OF 1
DESCRIPTION RELAY ASSY, SOLID STATE
NEXT ASSY MULTIUSAGE BY RA CK'D ____ APPD ____

REV	ECN	DATE	BY	APP
N/C	2084	9-72		

DELTA DESIGN
5725 KEARNY VILLA RD.
SAN DIEGO, CALIF.

JOB NO. ____ S.O. NO. ____
QTY ____ PROM DATE ____ ACT ____
RUN * ____ MACH ____

ITEM NO	ASSY & QTY -001	-002	-003	-004	INDENTURE	SIZE	DRAWING NO.	REV	DESCRIPTION	MFG OR MFG NO.	STOCK OR PART NO.	JOB QTY	AUL	QTY REC	FAB CD	PURCHASING P.O. NO.	QTY	DUE	REC	MANUFACTURE STD	ACT EST HRS	ACT COM	COM	PLATE/PAINT IN	OUT	APP
00	X					B	1654248		RELAY ASSY SOLID STATE		1654248-001															
00																										
00																										
00																										
00																										
00																										
00																										
01	1					B	1654184		HEATSINK, SOLID STATE RELAY		1654184-101															
02																										
03	1								RELAY, SOLID STATE		1400194															
04	2								SCREW 8-32 X .375 SHC-MS		6808323-808															
05	2								WASHER, SPLIT #8		6608010															
06	AR								THERMAL COMPOUND		9900026															

NOTES:

1654248 P/L REV

1182

REVISIONS				
ZONE	LTR	DESRIPTION	DATE	APPD
	A	PER ECN M1020 RBrooks 8-7-75 ADDED S4C & A1-22	8-21-5	[illegible]

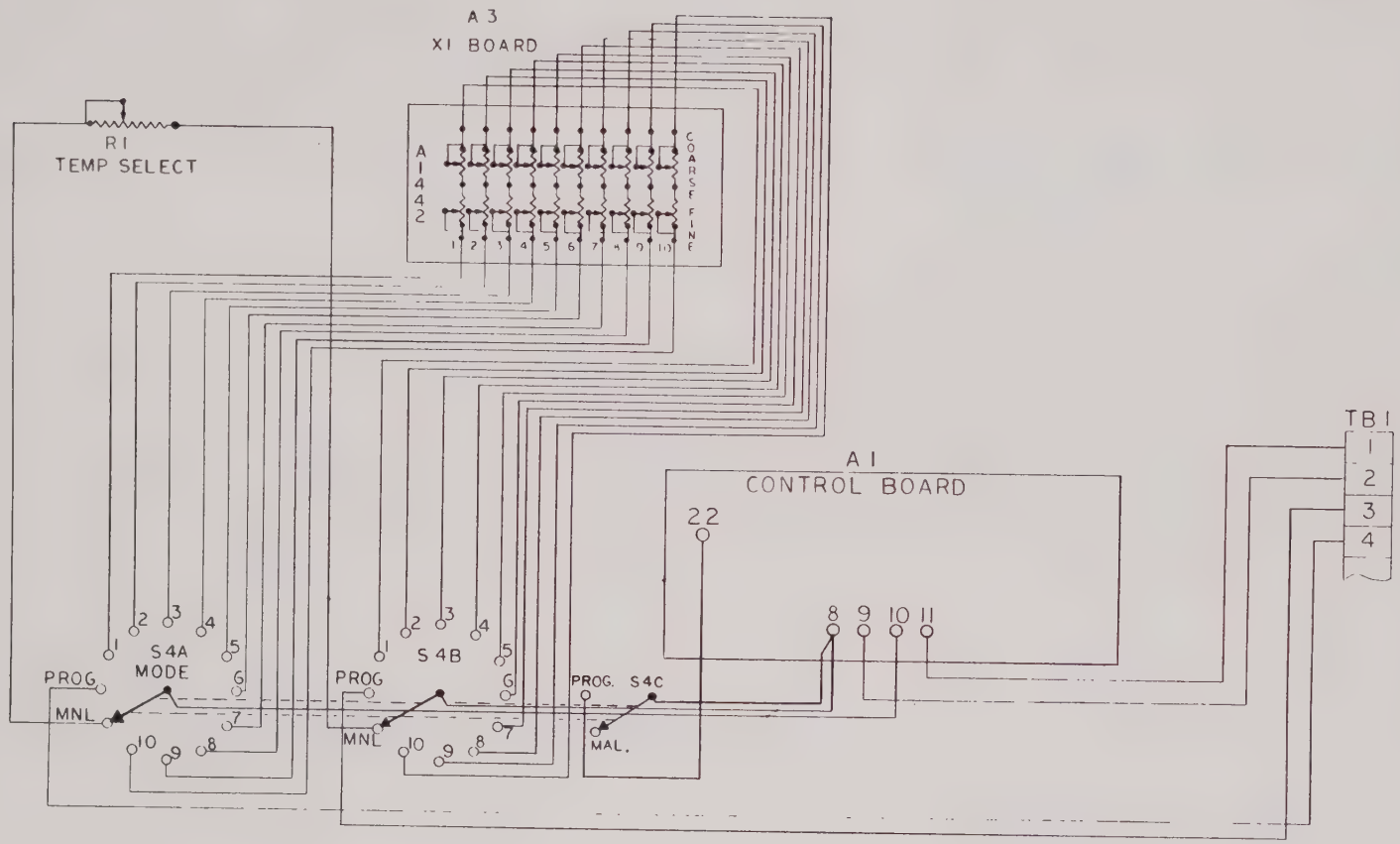

DASH	QTY	NEXT ASSY	USED ON	SERIAL NO.	DATE EFF	DWG REV
APPLICATION				EFFECTIVITY		

UNLESS OTHERWISE SPECIFIED
DIMENSIONS ARE IN INCHES
TOLERANCES, ON
DECIMALS .XX ± .03 .XXX ± .010
ANGLES 0° 30'
HOLE TOLERANCES
.013 THRU .125 +.004 -.001
.126 THRU .250 +.006 -.001
.251 THRU .500 +.006 -.001
.501 THRU .750 +.000 -.001

MATERIAL △1
FINISH △2

ENGINEERING ACTIVITY

DESIGN	DELTA
DRAFTED	R WILLIAMS 8-13-73
CHECKED	[illegible] 8-13-73
APPROV	[illegible] 8-13-73
RELEASE	

DO NOT SCALE DWG

DELTA DESIGN INC.
A SUBSIDIARY OF COHU INC.
5725 KEARNY VILLA RD SAN DIEGO, CA. 92123 - TEL (714) 292-3000

TITLE: X1 OPTION ASSY TYPE III CONTROLLER

SIZE C | CODE IDENT | 2638511

SCALE -- | SHEET 1 OF 1

△1 FINISH (IF APPLICABLE)

△2 MATL (IF APPLICABLE)

NOTES: UNLESS OTHERWISE SPECIFIED

BISHOP GRAPHICS/ACCUPRESS REORDER NO. 2133

FORM 4-17-72

DELTA DESIGN, INC.
5725 KEARNY VILLA RD
SAN DIEGO, CA. 92123
TEL. (714) 292-5000

NOTES:

ITEM	QTY	DRAWING NUMBER	DESCRIPTION	MANUFACT AND NO.	STK OR PART NO.	FAB CODE
00	REF		XI OPTION ASSY			
01	1	△1	PC BOARD A3		1639955	
02	A/R		POTENTIOMETER 10 OHM FINE	BOURNS 3367-P-1-100	0500027	
03	A/R		POTENTIOMETER 500 OHM COURSE	BOURNS 200L-1-200M	0500028	
04	1		SWITCH, MODE S4	CTS T225	1400190	
05	3		STANDOFF, SCREW		4100192	
06	A/R		TERMINAL, SOLDER		1400550	
		△1	ART - 1639955			
			DRILL - 1633534			

REVISIONS

REV	DATE	BY	APPD	DESCRIPTION
A	8-7-75	R Brooks	[illegible]	ITEM 4 WAS CTS215 (ECN M1020)
B	3-8-78	D [illegible]	[illegible]	ITEM 1 WAS 1300009

TITLE: X1 OPTION ASSEMBLY

NEXT ASSY P/L

BY	ROGER WILLIAMS	8-10-73
CHK	[illegible]	8.13.73
APPD	[illegible]	8-13-73

P/L 2638511 REV B SHT 1 OF 1

1182

45

www.manualsplus.com
1018204